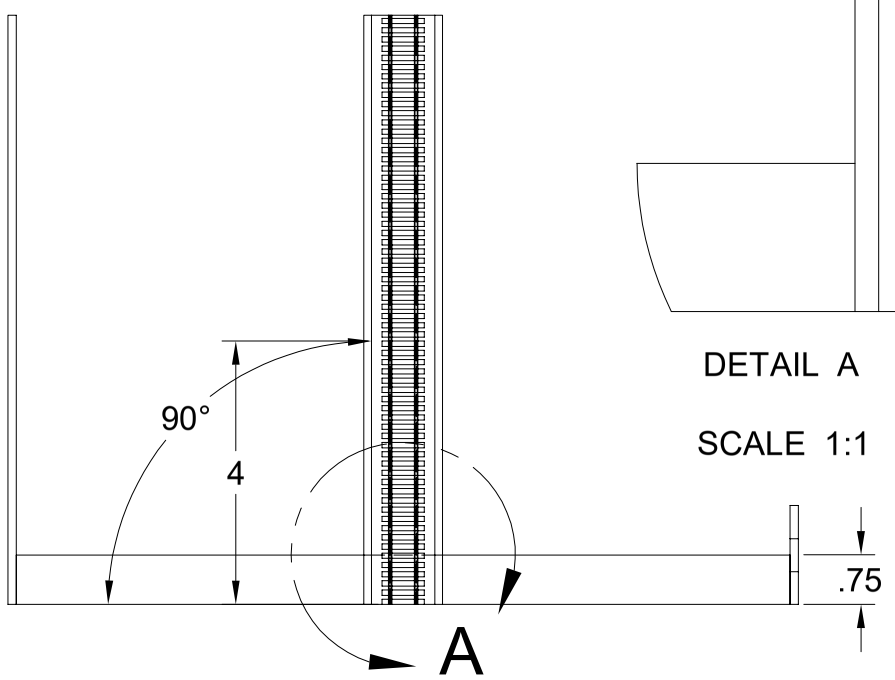

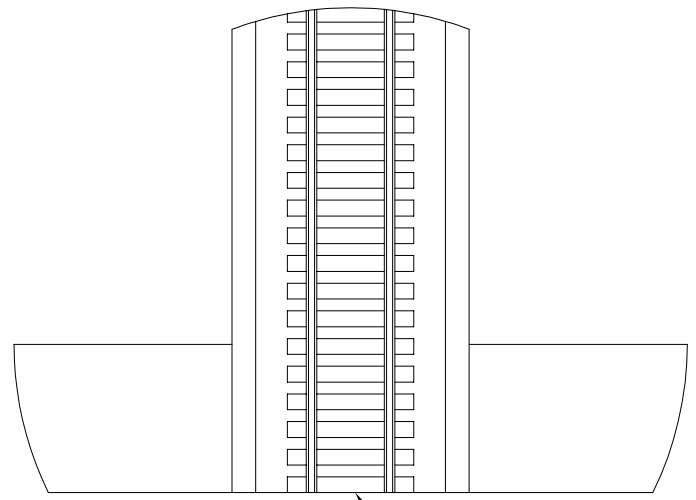

DETAIL A

SCALE 1:1

Rails, ties, roadbed and ballist continue to module end.

Rails cut flush with module end to support "butt" joints between modules

Track shall be straight and level for 4 inches inwards from outer face of endplate.

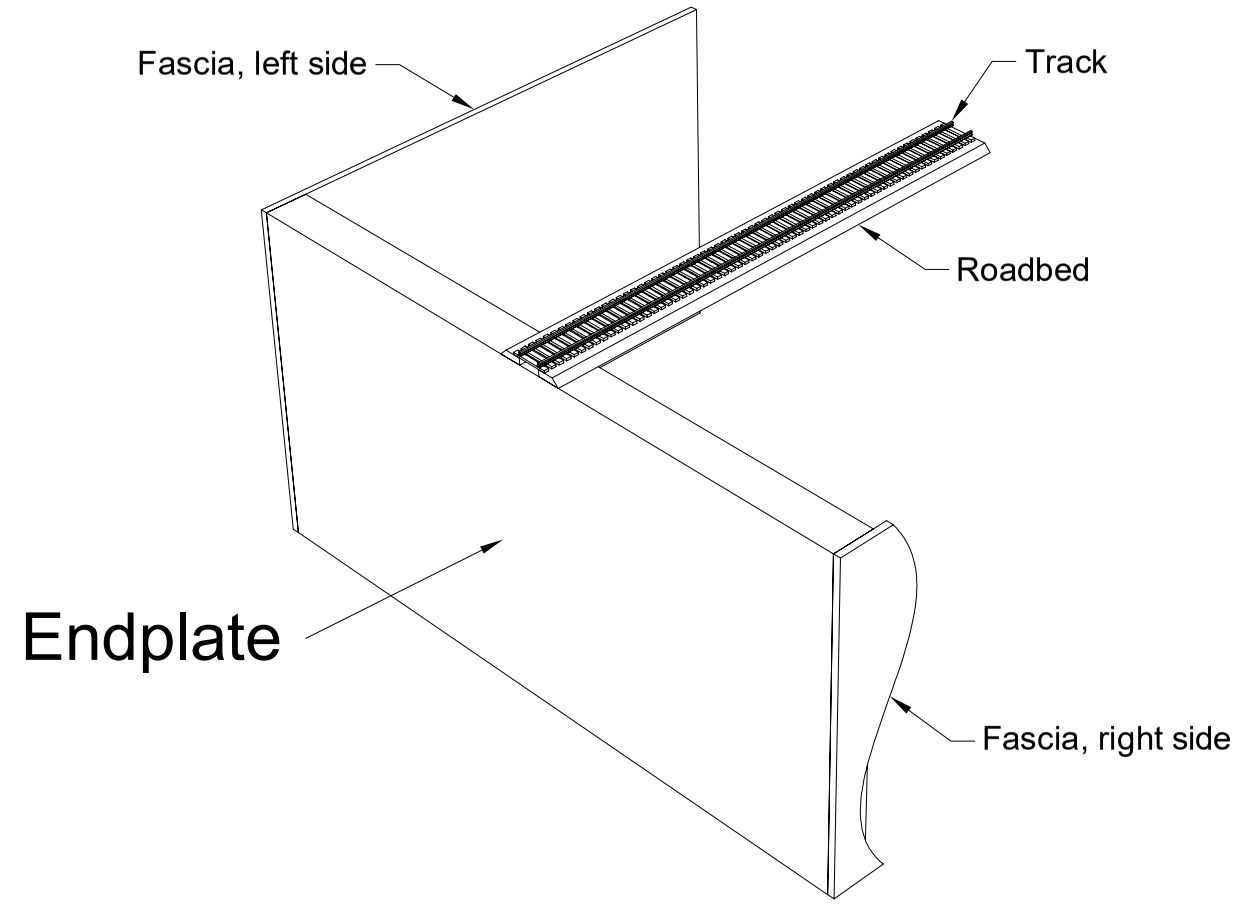

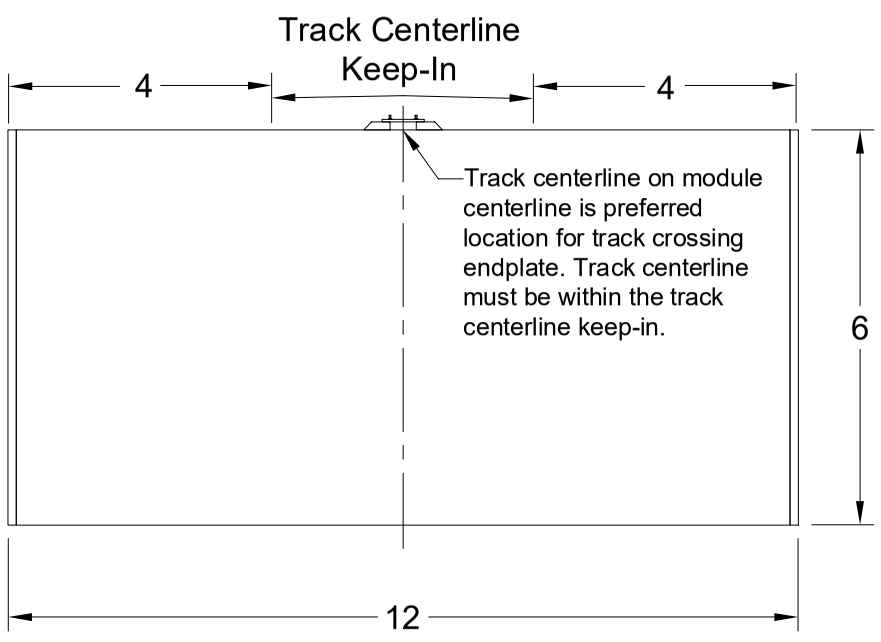

Minimum module width: 12". No maximum width
Track centerline keep-in grows with module width.

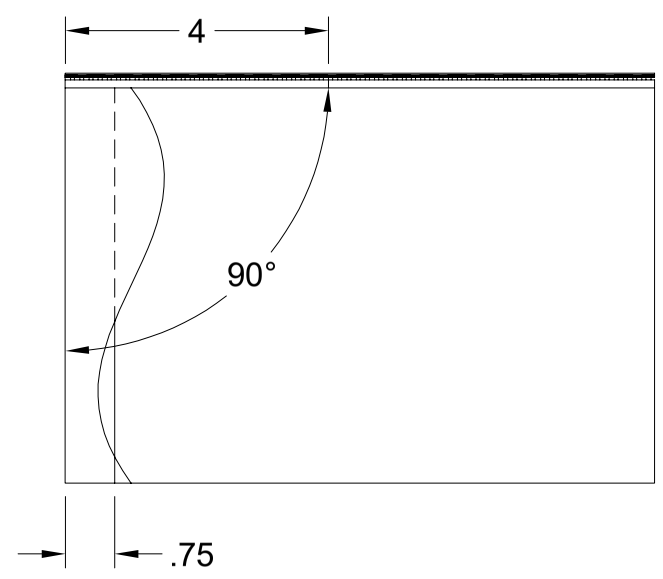

Notes: Endplate shall be $\frac{3}{4}$" cabinet grade plywood
Do not use dimensional lumber for endplate!

This drawing only shows requirements from the standard. Methods of supporting track and fascias are needed and are up to module builder.

Project: Free-moN Standards Drawings				
Title: Single Track Endplate				
Note: All Dimensions in Inches	Per Standards Revision Dated: 20230206			
Drawn: Steve Branton	8/17/2024	Scale: 1:3	Size: B	Page: 1/1